Data sheet

Commercial Art.No.: 5D.S03.4755.0

fuse terminal WTN 2.5 E FSI60 5X20

fuse terminal WTN 2.5 E FSI60 5X20 rated voltage 60 V, rated current 6.3 A, screw connection, number of levels 2, number of clamp positions per level 2, nominal cross section 2.5 mm², connectable conductor cross section fine stranded without cable end sleeve 0,34mm² - 2,5mm², mounting method DIN rail (top hat rail), color grey, width/grid dimension 6.2 mm, inflammability class of insulation material acc. with ul94 V0

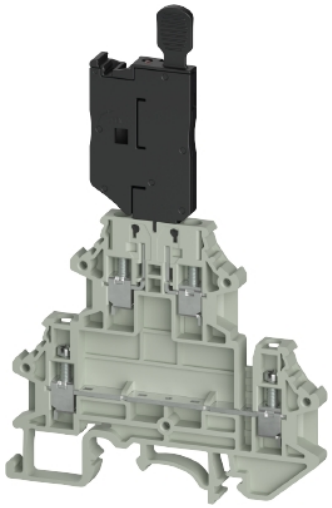

Commercial Art.No.	5D.S03.4755.0
EAN	4049088724619
Order Unit	50

certificates / approvals

Technical data

general

nominal cross section	2.5 mm²
color	grey
number of levels	2
number of clamp positions per level	2
width/grid dimension	6.2 mm
insulating housing	PA
inflammability class of insulation material acc. with UL94	V0
mounting method	DIN rail (top hat rail)

technical data

rated current	6.3 A
rated voltage	60 V
rated impulse voltage	4 kV
pollution degree	3
closing plate required	yes
type of insulation material	thermoplastic
length	71.5 mm
width	6.2 mm

connection data

connection type	screw connection
connection type 1	screw connection

minimum cross section solid	0.34 mm²
maximum cross section solid	4 mm²
minimum cross section fine stranded	0.34 mm²
maximum cross section fine stranded	2.5 mm²
minumum conductor cross section (flex., stranded) with cable end sleeve	0.25 mm²
maximum conductor cross section (flex., stranded) with cable end sleeve	2.5 mm²
wire strip length	10 mm
torque conductor mounting	0.4 Nm

technical data UL/CSA

cross section UL	22-12 AWG
voltage UL	60 V
current factory wiring	10 A
current field wiring	10 A
cross section CSA	22-12 AWG
voltage CSA	60 V
current CSA	10 A

classification

ETIM 9.0	EC000899

product compliance

REACH-SVHC conformity status	compliant

Accessories

Commercial Art.No.:	Article-type description:	Description:
0D.S03.3227.5	jumper bar IVB WTN 2,5-2	jumper bar IVB WTN 2,5-2 modular spacing 5.1 mm, insulated yes, number of poles 2, color red, mounting method pluggable, inflammability class of insulation material acc. with ul94 V0
0D.S03.3327.5	jumper bar IVB WTN 2,5-3	jumper bar IVB WTN 2,5-3 modular spacing 5.1 mm, insulated yes, number of poles 3, color red, mounting method pluggable, inflammability class of insulation material acc. with ul94 V0
0D.S03.3427.5	jumper bar IVB WTN 2,5-4	jumper bar IVB WTN 2,5-4 modular spacing 5.1 mm, insulated yes, number of poles 4, color red, mounting method pluggable, inflammability class of insulation material acc. with ul94 V0
0D.S03.3527.5	jumper bar IVB WTN 2,5-5	jumper bar IVB WTN 2,5-5 modular spacing 5.1 mm, insulated yes, number of poles 5, color red, mounting method pluggable, inflammability class of insulation material acc. with ul94 V0
0D.S03.4027.5	jumper bar IVB WTN 2,5-10	jumper bar IVB WTN 2,5-10 modular spacing 5.1 mm, insulated yes, number of poles 10, color red, mounting method pluggable, inflammability class of insulation material acc. with ul94 V0
0D.S03.5027.5	jumper bar IVB WTN 2,5-20	jumper bar IVB WTN 2,5-20 modular spacing 5.1 mm, insulated yes, number of poles 20, color red, mounting method pluggable, inflammability class of insulation material acc. with ul94 V0
0D.S03.2355.0	end plate APWTN 2.5/4 E	
0D.202.7281.0	marking strips WML 9.8/60	marking strips WML 9.8/60 color white
0D.203.7056.0	marking plate WMP 5,10-10	marking plate WMP 5,10-10 modular spacing 5.1 mm, color white

5D.S03.4755.0

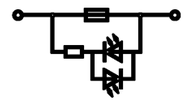

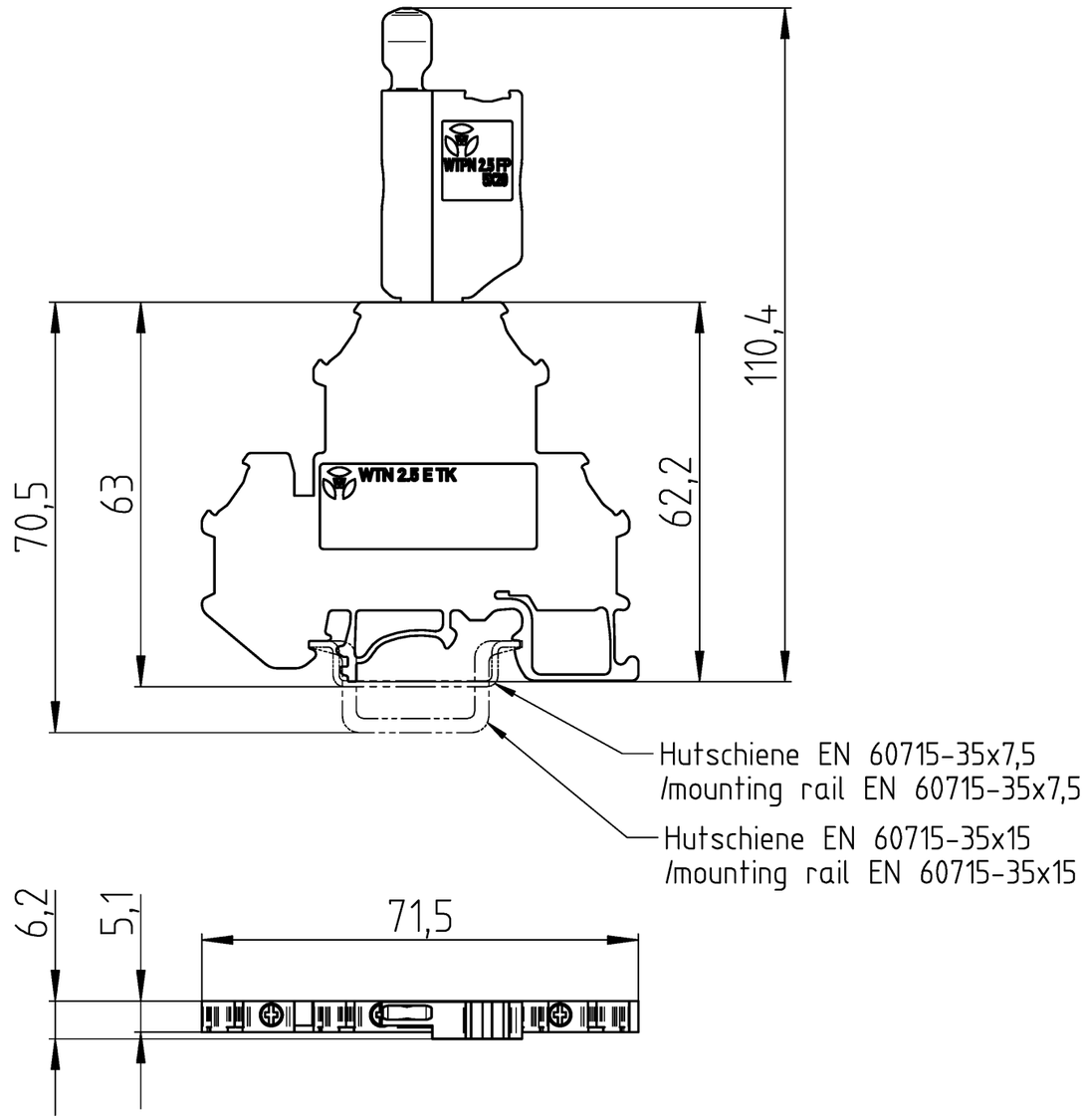

1:1

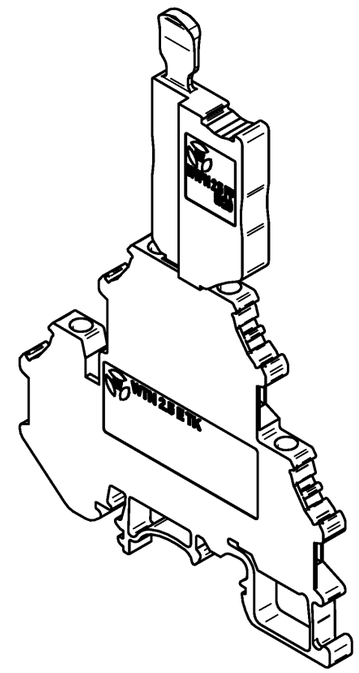

© Alle Rechte vorbehalten
© All rights reserved
Vertraulichkeitsklasse
Confidentiality Class
Vertraulich
Confidential

These dimensions will be especially checked at delivery
Only inspection dimensions
With /E marked dimensions are only valid for internal use

Diese Maße werden bei Abnahme besonders geprüft
Ausschließlich Prüfmaße
Mit /E gekennzeichnete Maße sind nur für interne Zwecke gültig

Weitere Daten siehe KATALOG oder eKatalog
additional data see CATALOG or eCATALOG

www.wieland-electric.com
eshop.wieland-electric.com

Tolerierung Size ISO 14405 Ⓔ / Tolerance system Size ISO 14405 Ⓔ.
(This ISO-standard describes the envolope principle. According to the envolope principle the deviations of form and parallelism are limited by the size tolerances).

ja/yes ☒ Stoffverbots- und Deklarationsliste nach WN 5020.010 ist einzuhalten. Conformity with Wieland document WN 5020.010 e (list of prohibited / declarable hazardous substances) to be declared!

Freitoleranz nach
General tolerance

CAD - Zeichnung, keine manuellen Änderungen
CAD - drawing, no manual modifications allowed

1. Verwendung:
First Use:

Blatt: 1 von 1
Sheet: 1 of 1

Index	Datum / Blatt Date / Sheet	Maßstab / Scale	Werkstoff / Material		Tag/Date	Name	Zeichnung Nr. / Drawing No.	Index
	/	1:1		gezeichnet drawn	18.09.2025	Sachs (extern)	T 5D.S03.4655.0 13K	
	/			Elektronische Freigabe Electronic Release			Maße in mm / Dimensions are in mm	
	/	Vol. mm³	Ofl./Srf. mm²	Ersatz für / Replacement for:				
	/			Type	Benennung/Title			
	/				SICHERUNGSKLEMME fuse terminal			

Änderung / Revision

wieland

Bestell-Nr. /order no.	Typ /type	Farbe /colour	VPE: packaging unit:
5D.S03.4655.0	WTN 2.5 E FSI 5X20	grau / grey	50
5D.S03.4755.0	WTN 2.5 E FSI60 5X20	grau / grey	

01-QU-RD-32/21